COZYMATIC

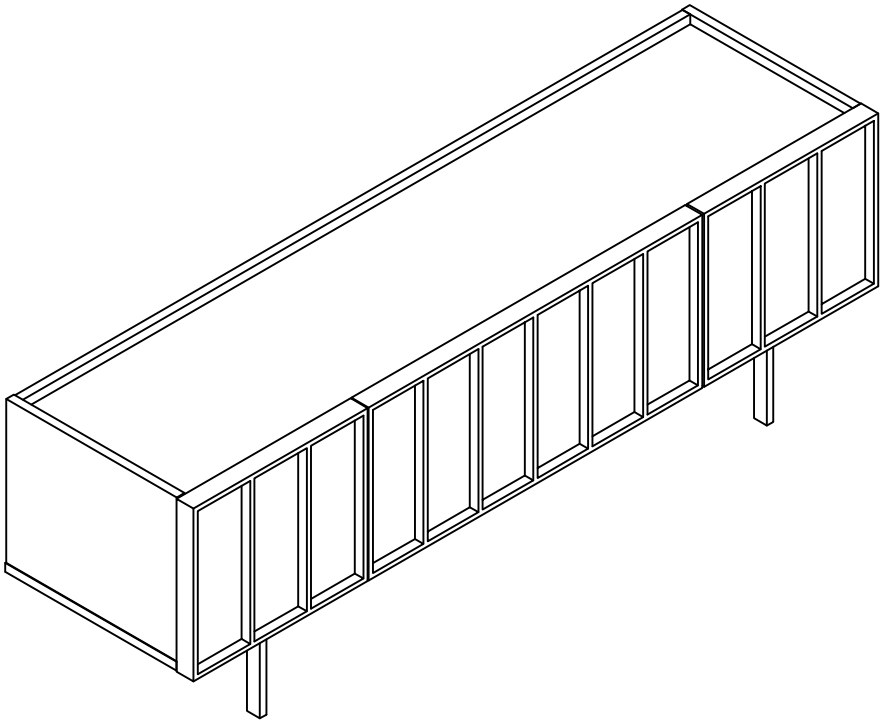

ASSEMBLY INSTRUCTIONS

COZYMATIC

Check the components before assembly

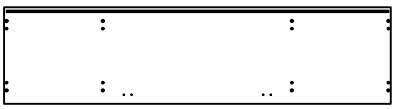

1 x 1

2 x 1

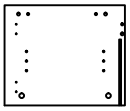

3A x 1

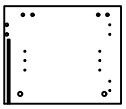

3B x 1

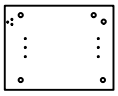

4A x 1

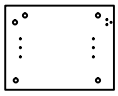

4B x 1

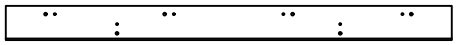

5 x 1

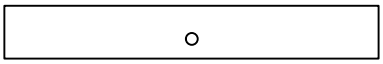

6 x 1

7 x 2

8 x 1

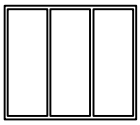

9 x 2

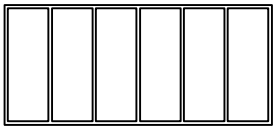

10 x 1

For any issue related to the product, please contact wecare@cozymatic.com.

COZYMATIC

Check the components before assembly

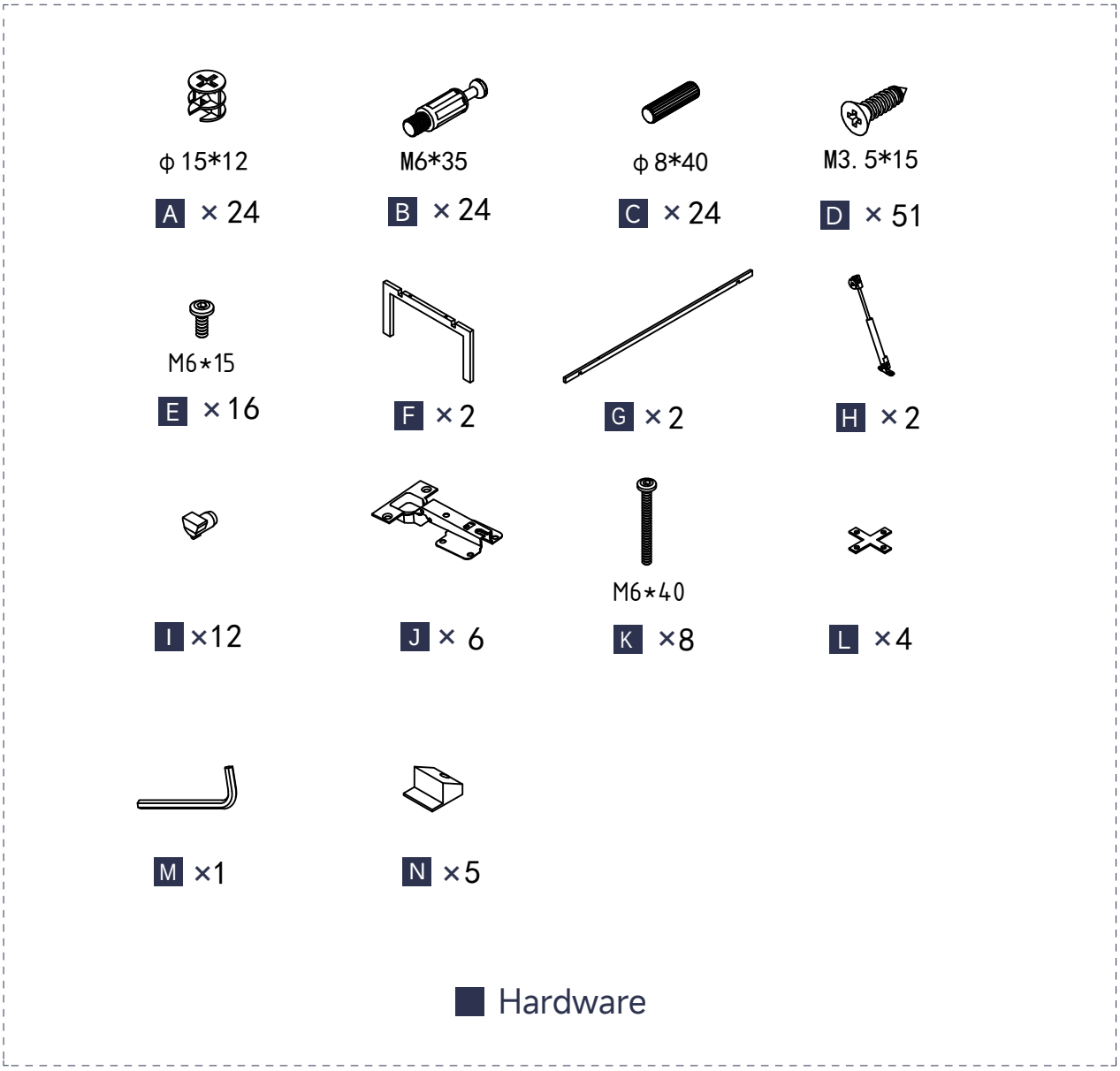

For any issue related to the product, please contact wecare@cozymatic.com.

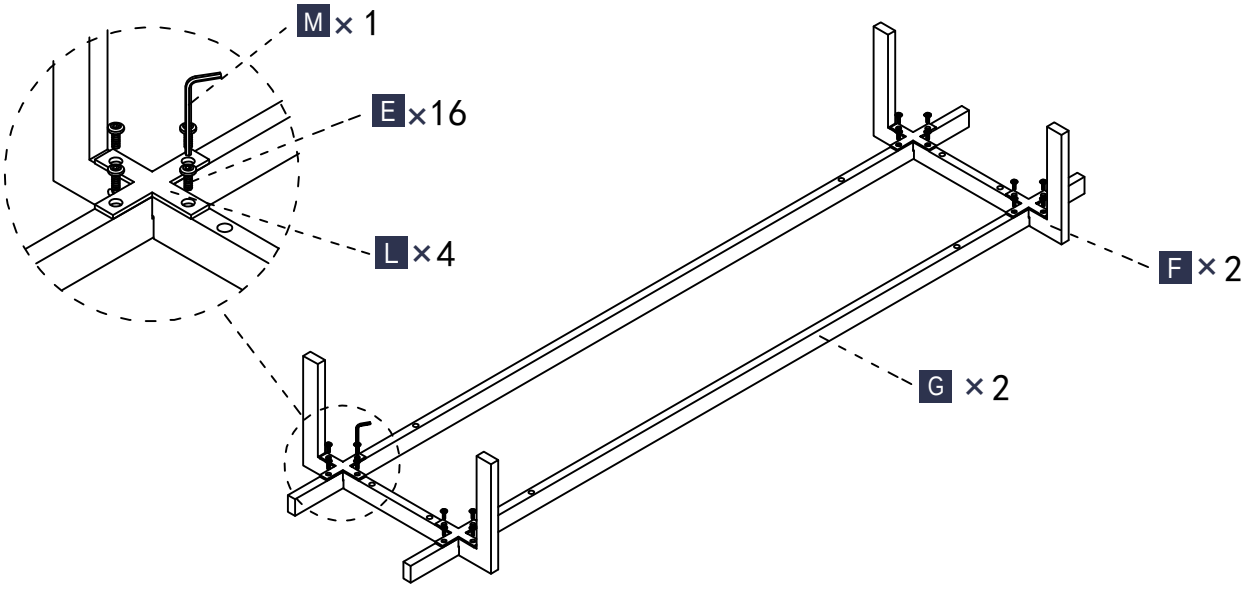

1
2

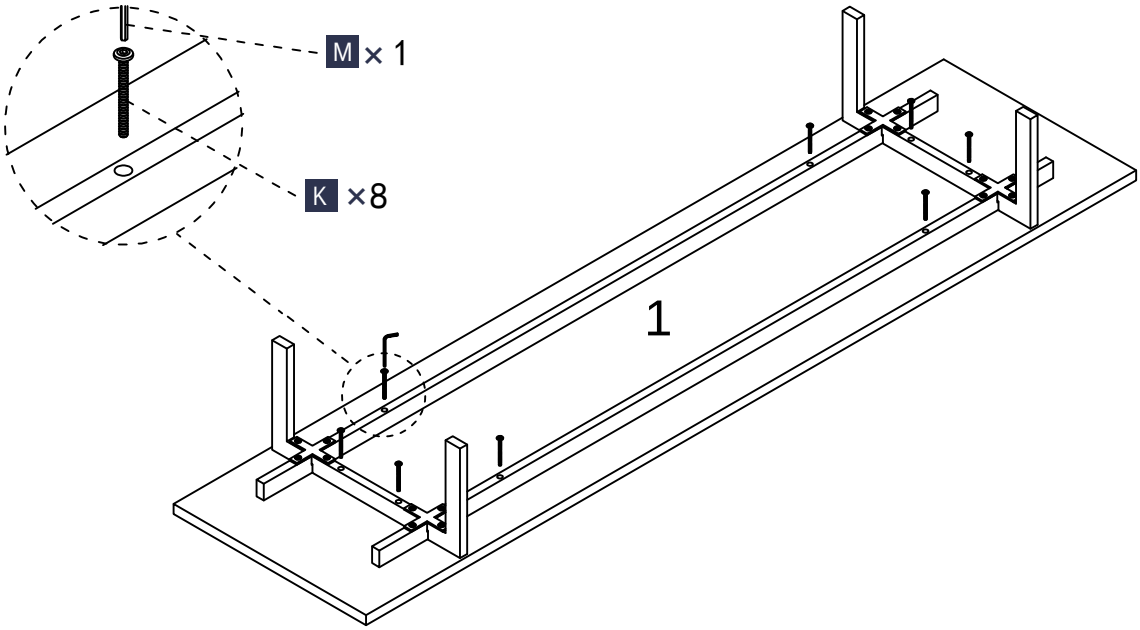

COZYMATIC

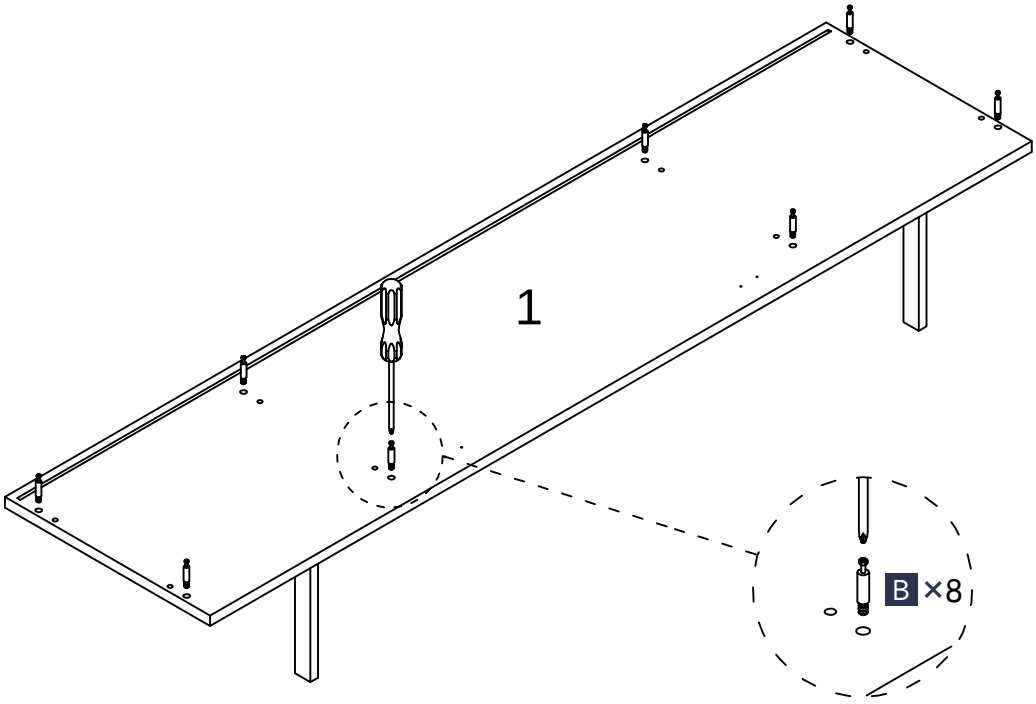

3
4

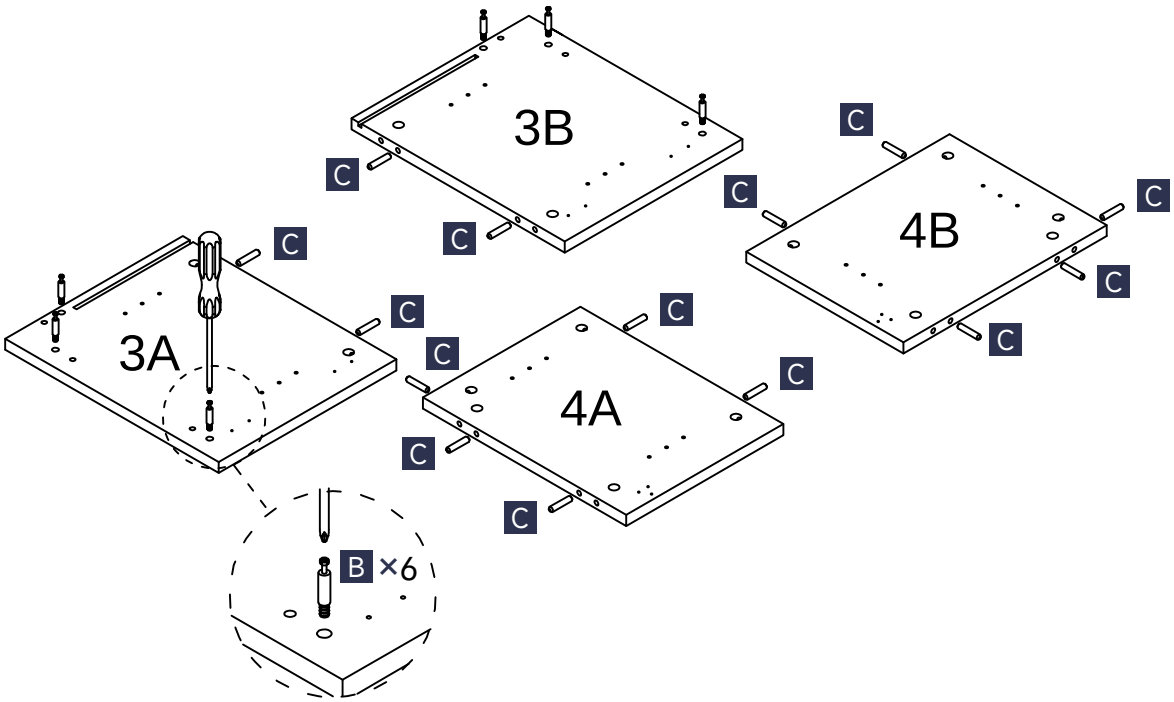

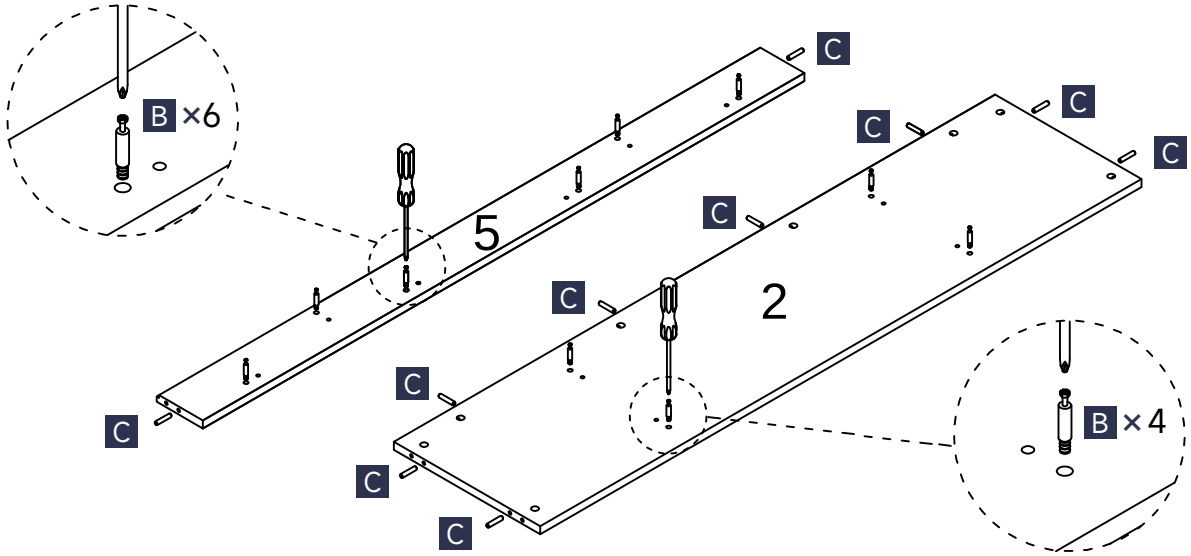

5
6

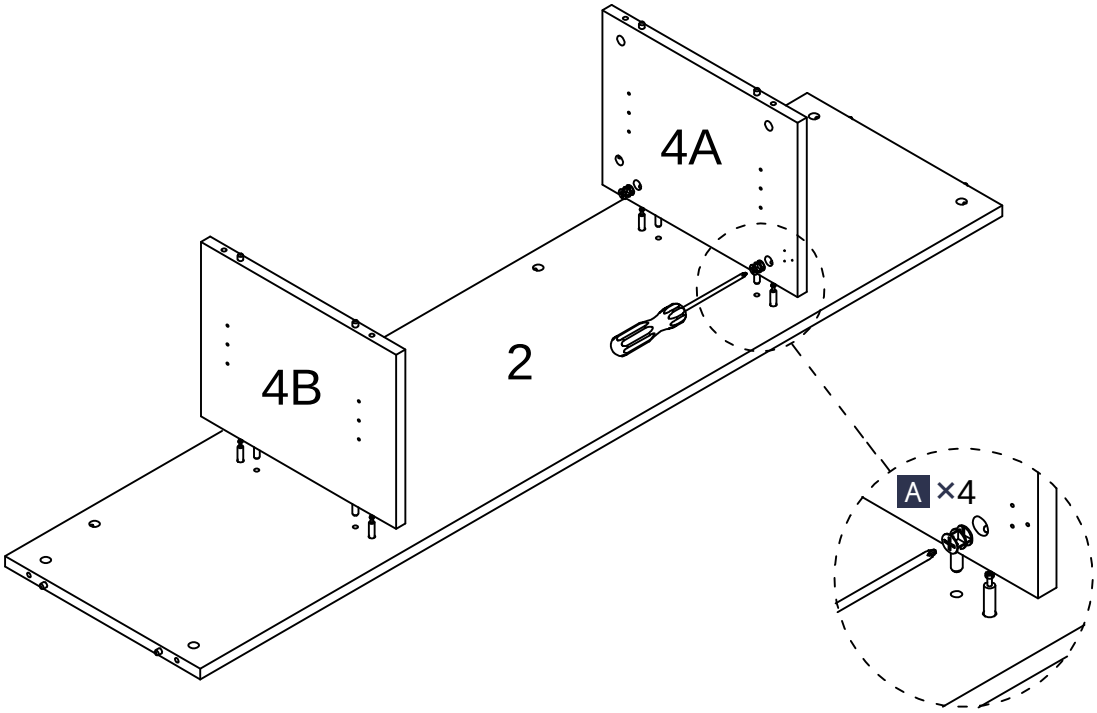

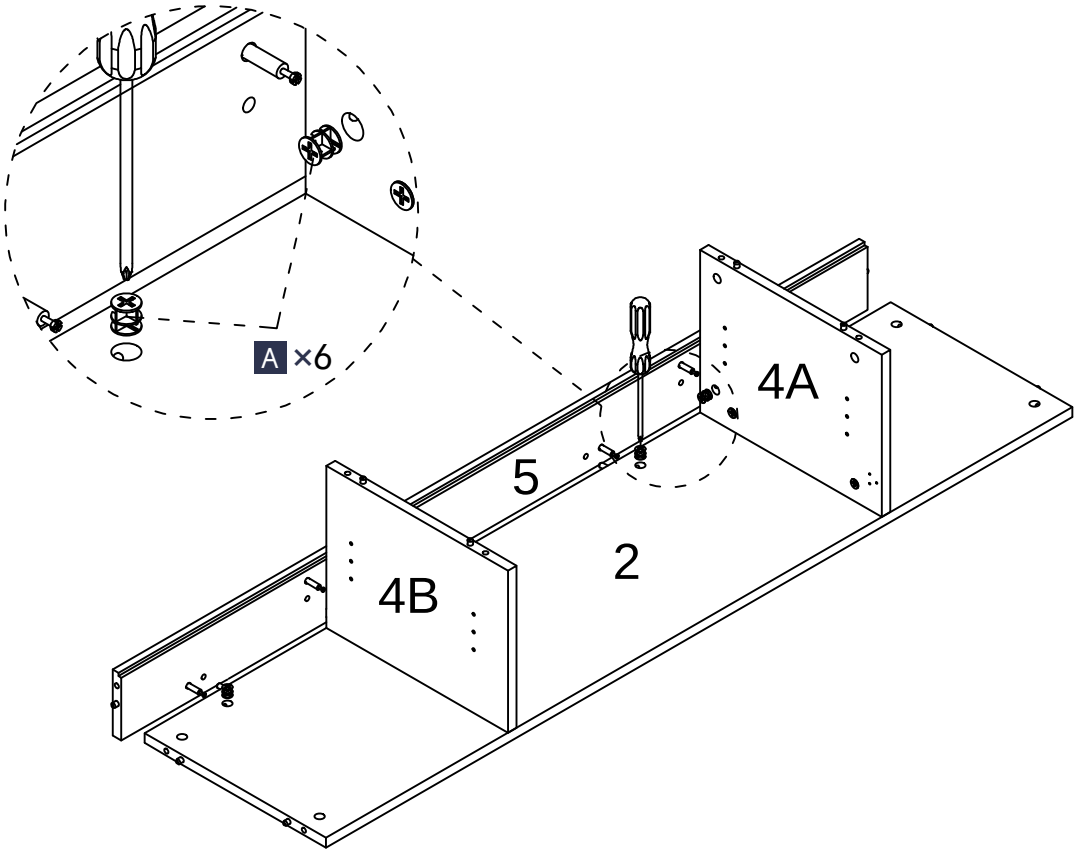

7
8

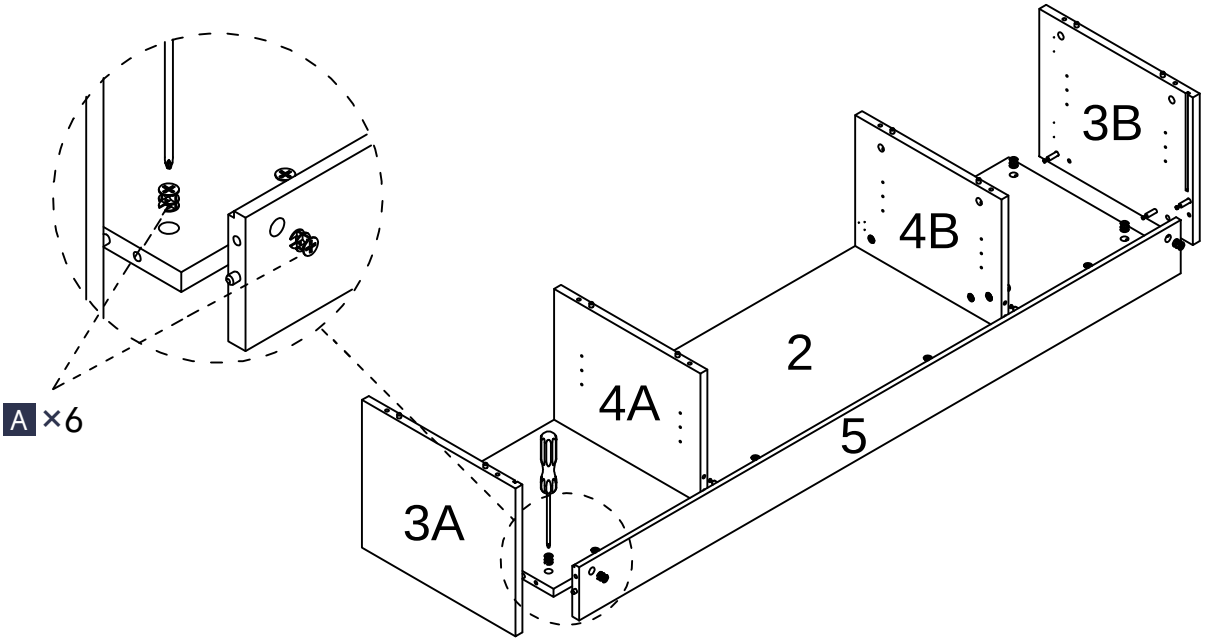

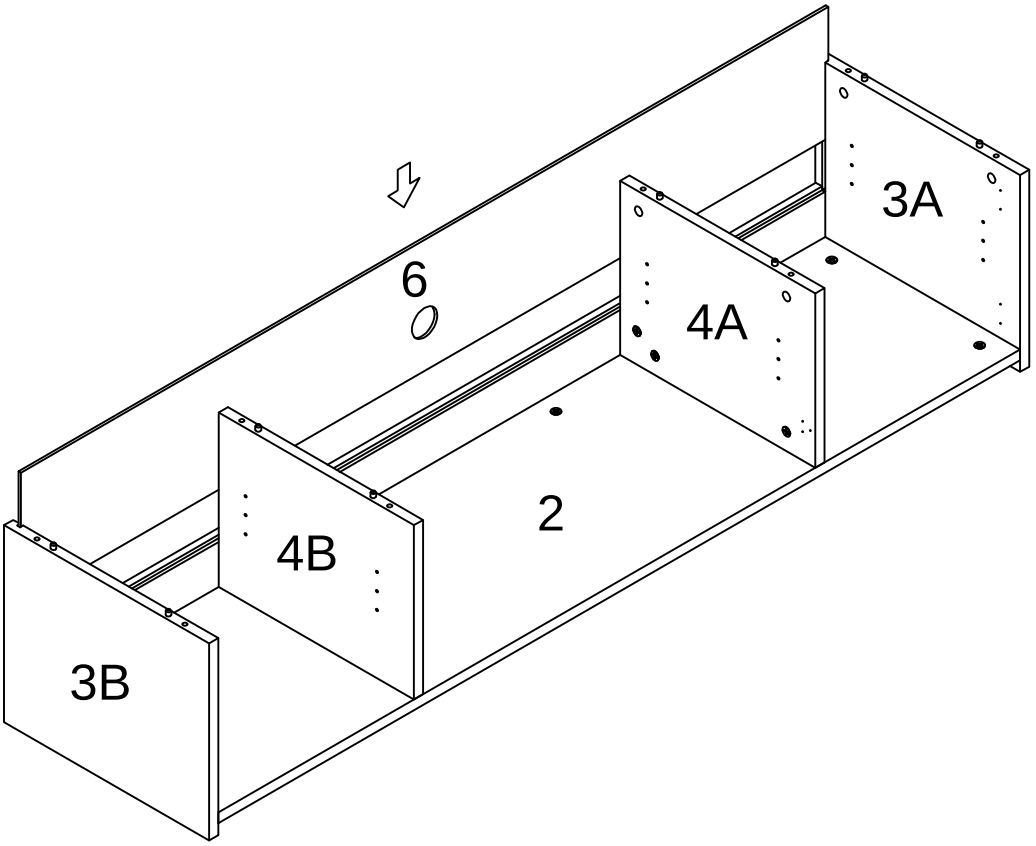

9
10

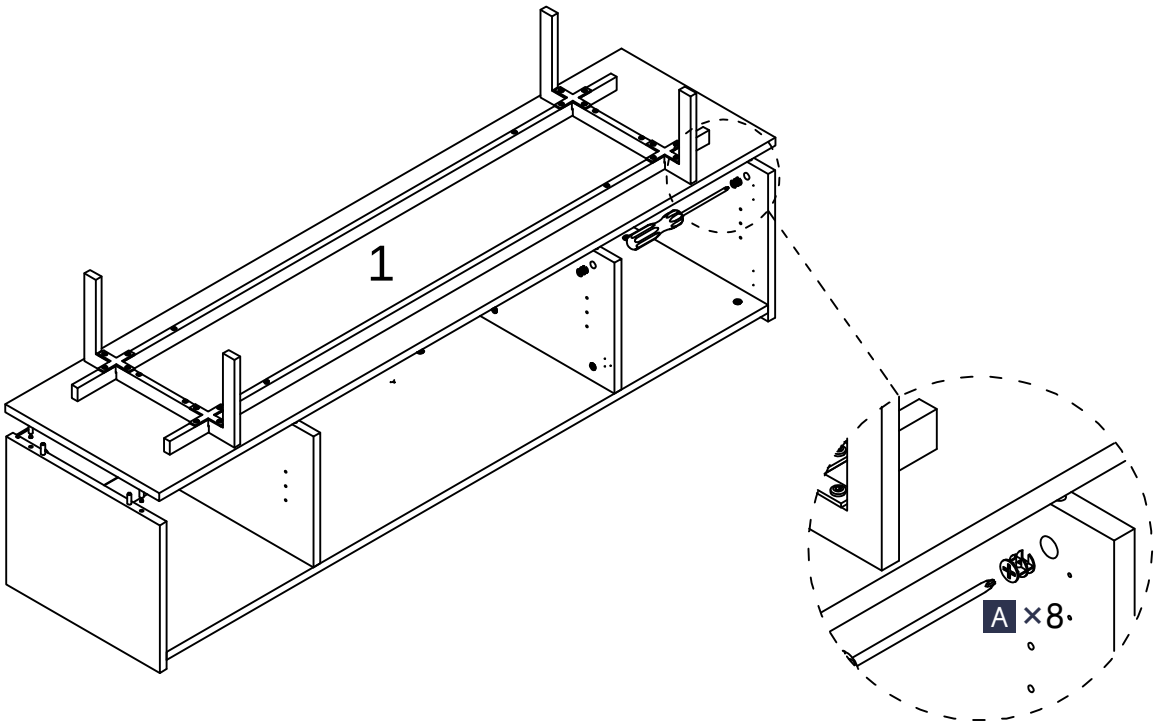

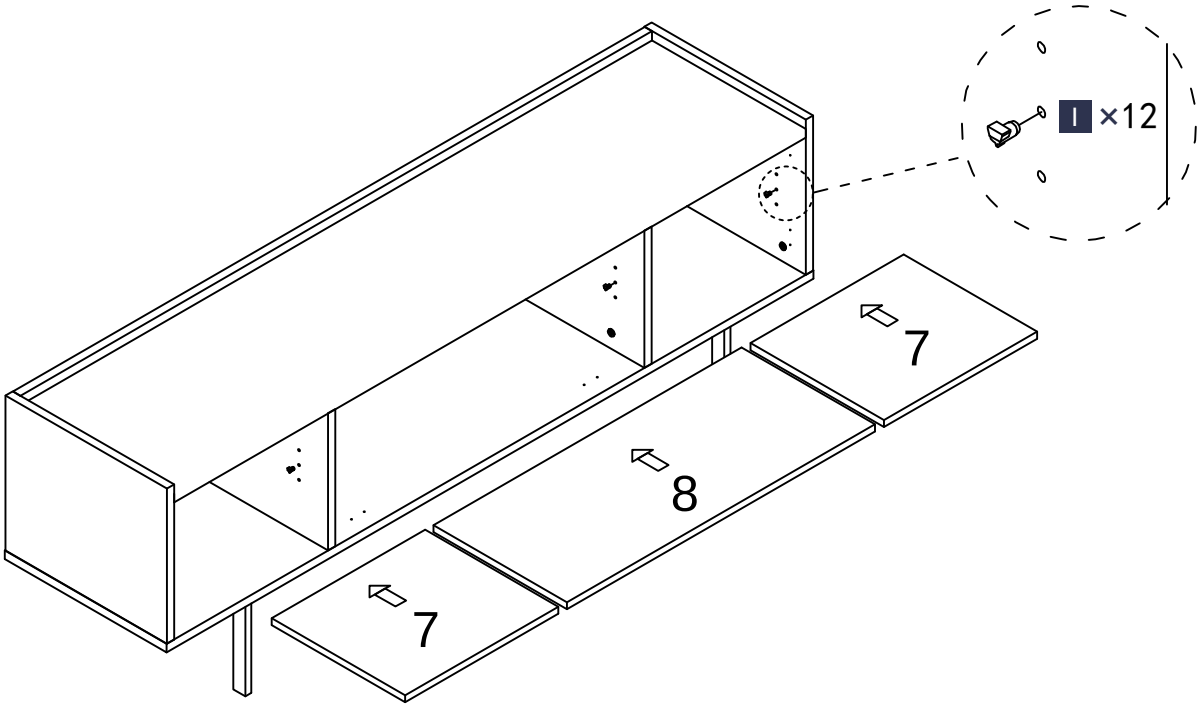

11
12

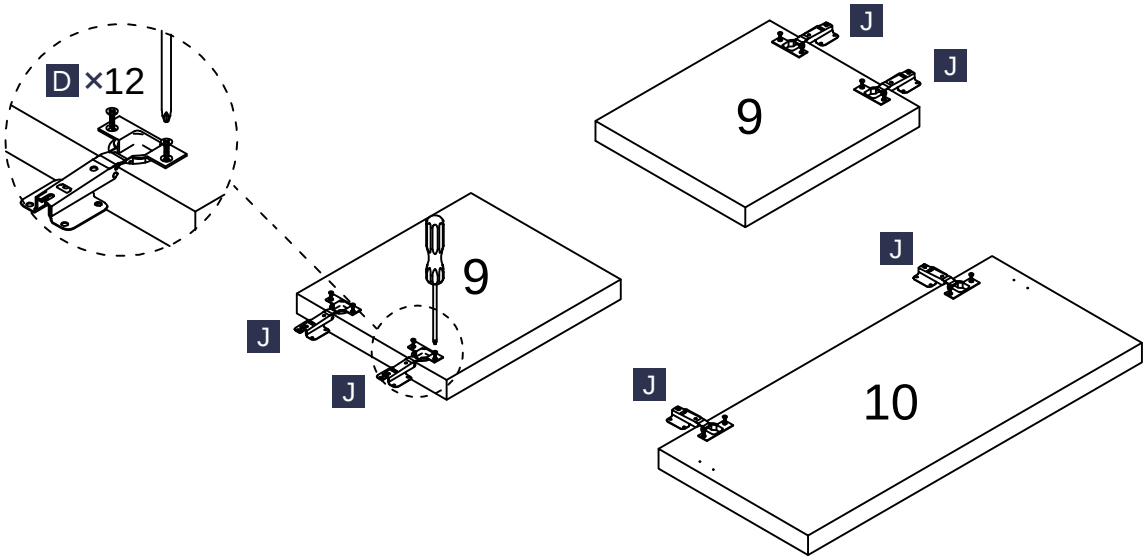

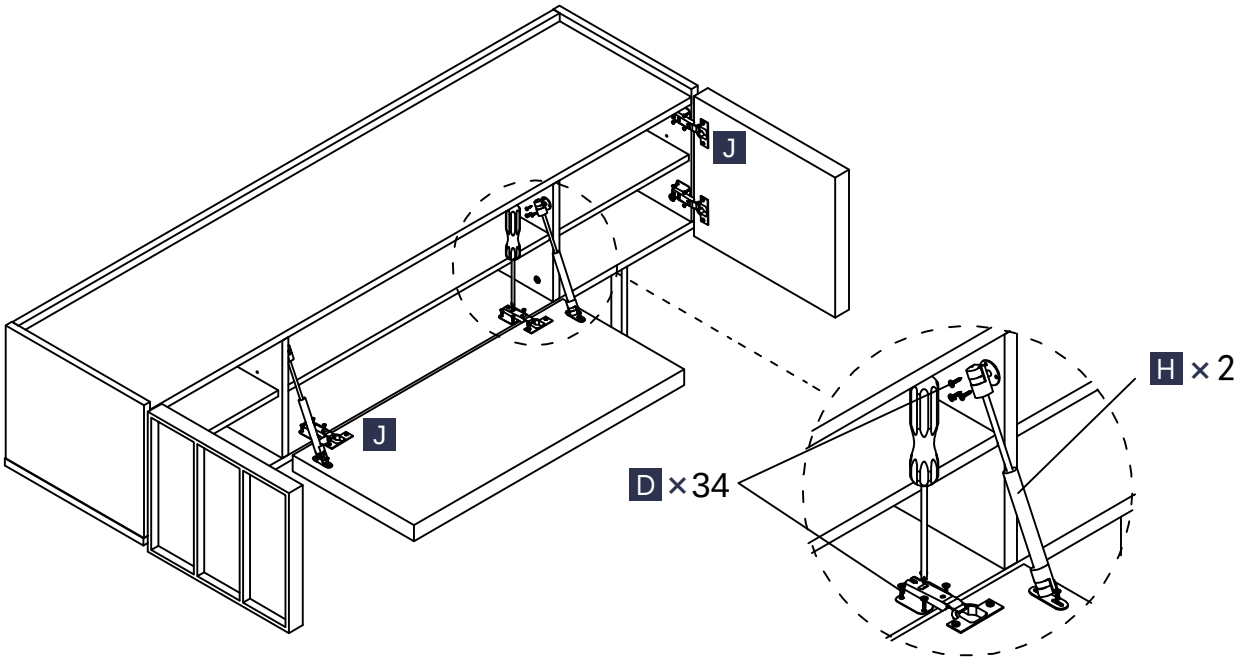

13
14

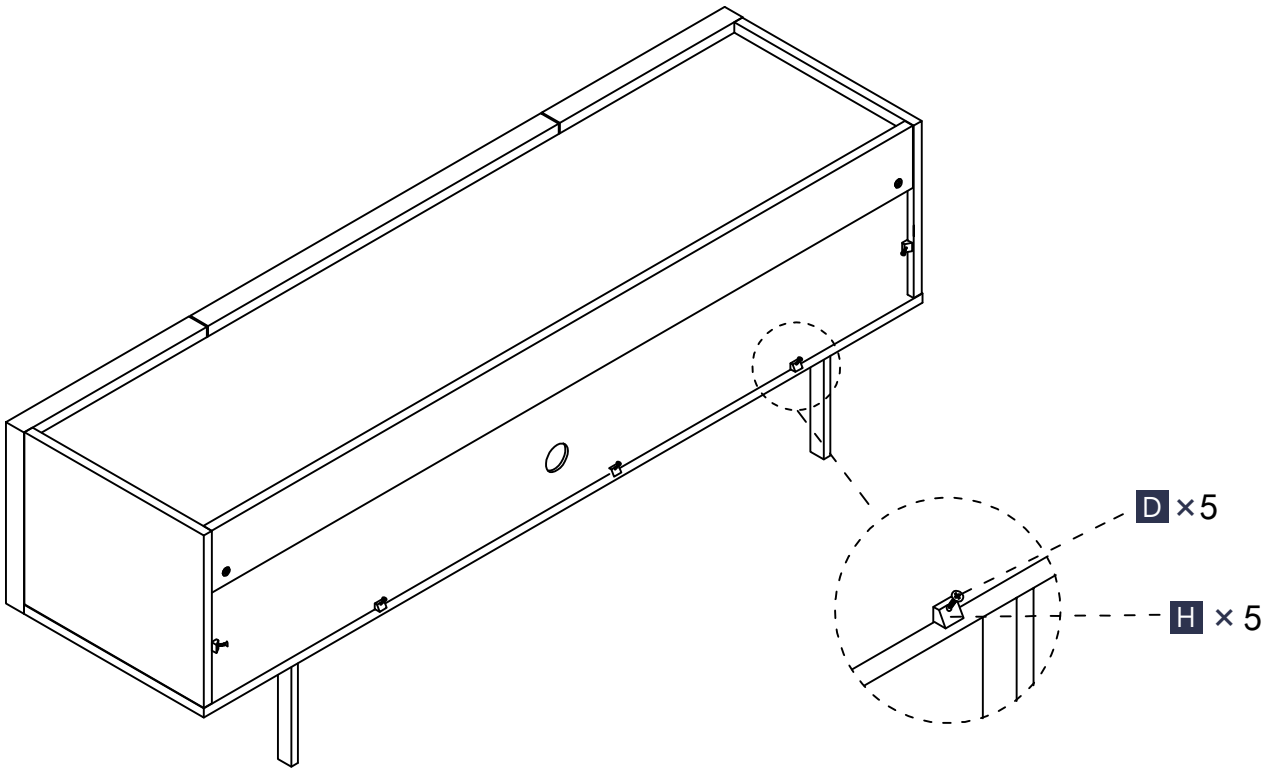

15

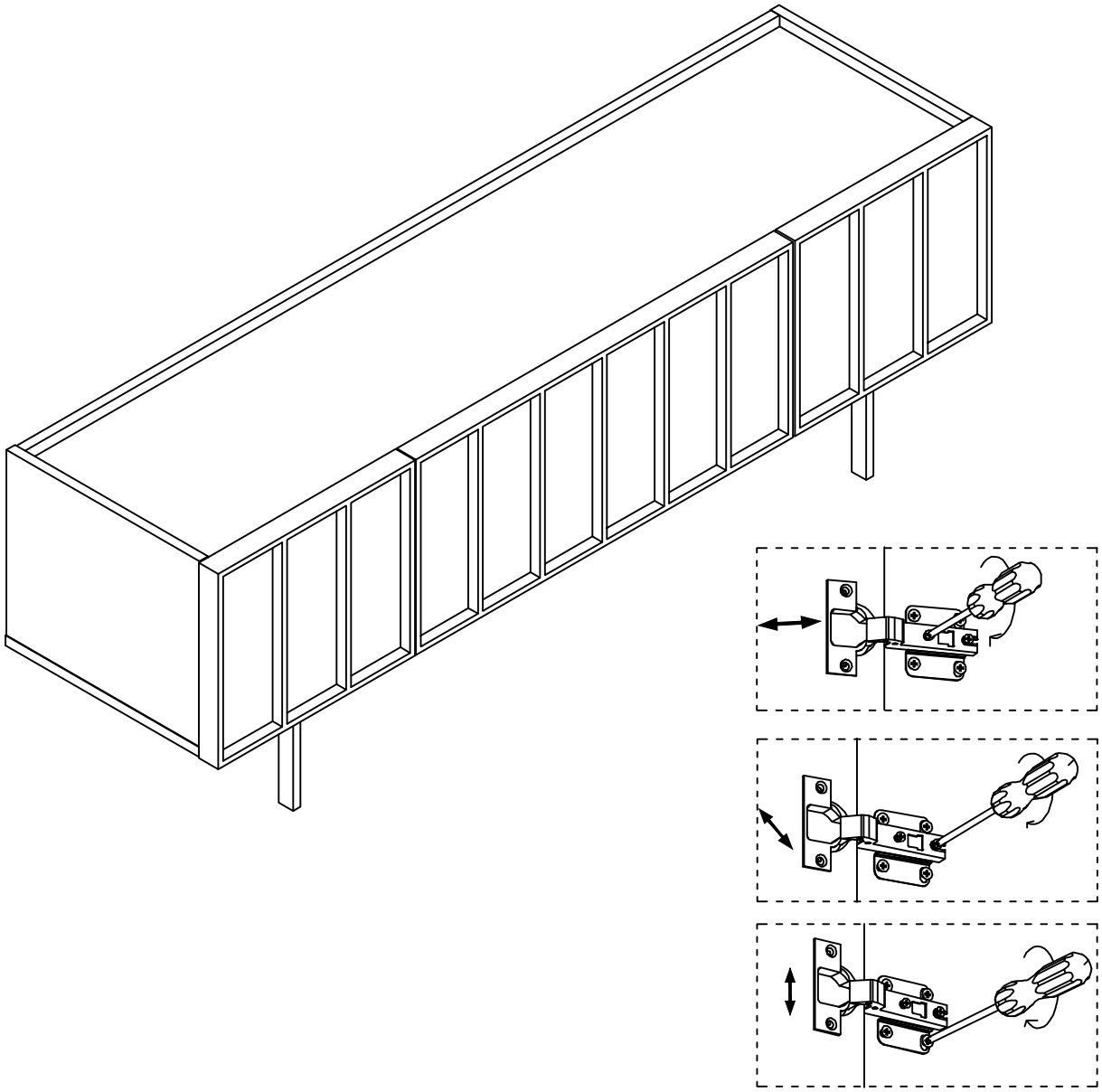

COZYMATIC

CONTACT US

We are here for you, wecare@cozymatic.com